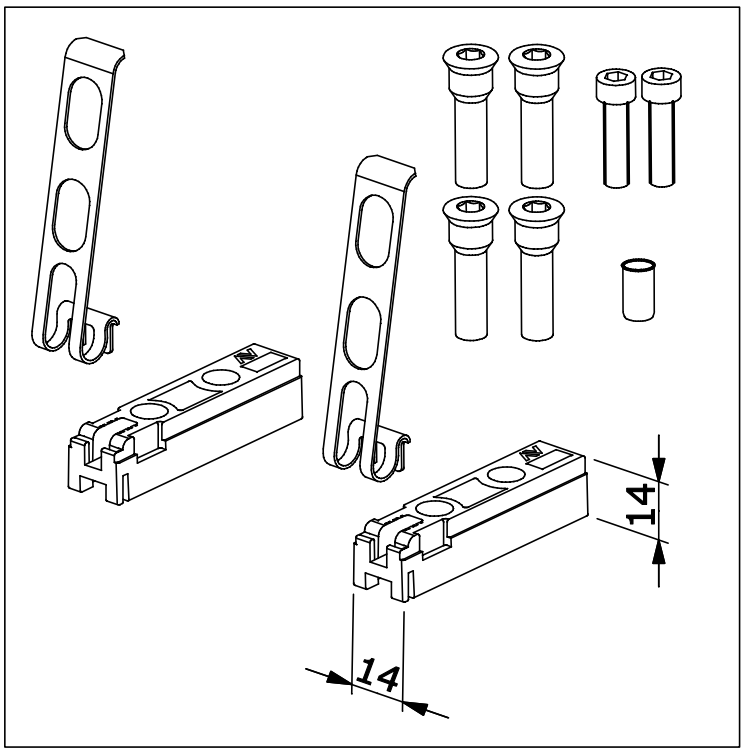1145.705