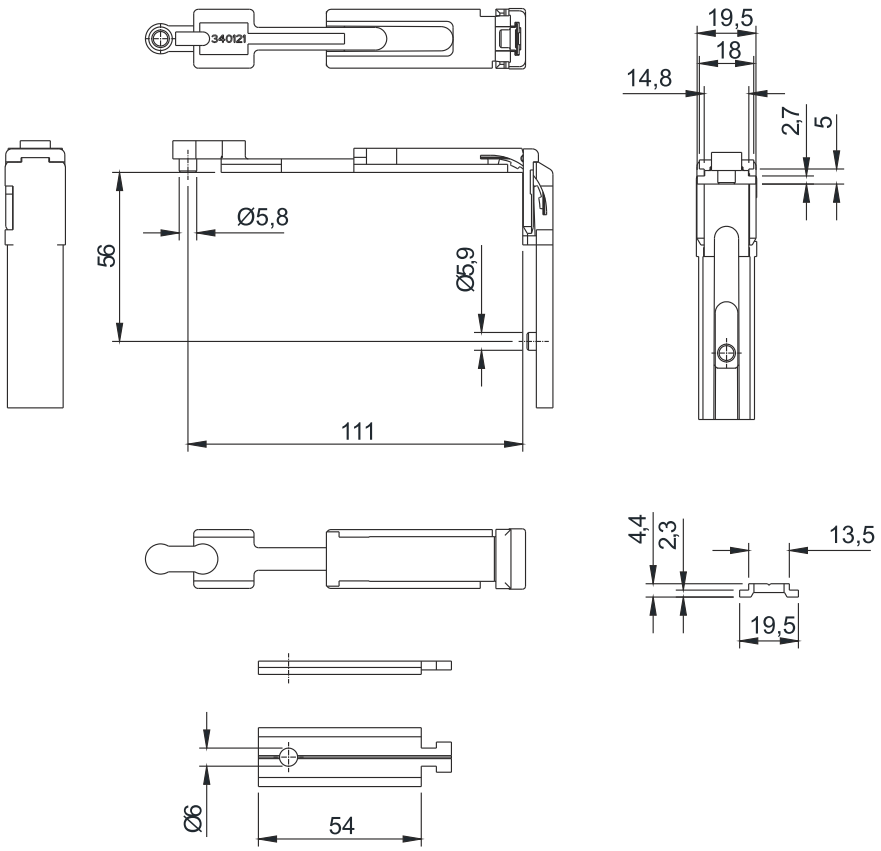1243.790