1330HD/20

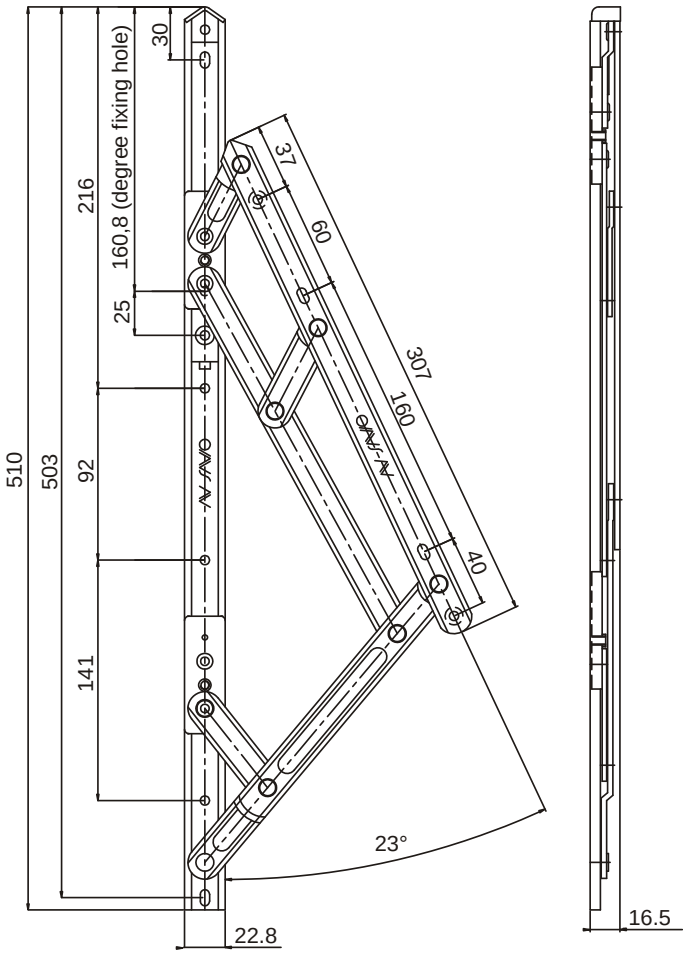
510
503
92
141
216
160,8 (degree fixing hole)
25
30
37
60
307
160
40
23°
22.8
16.5