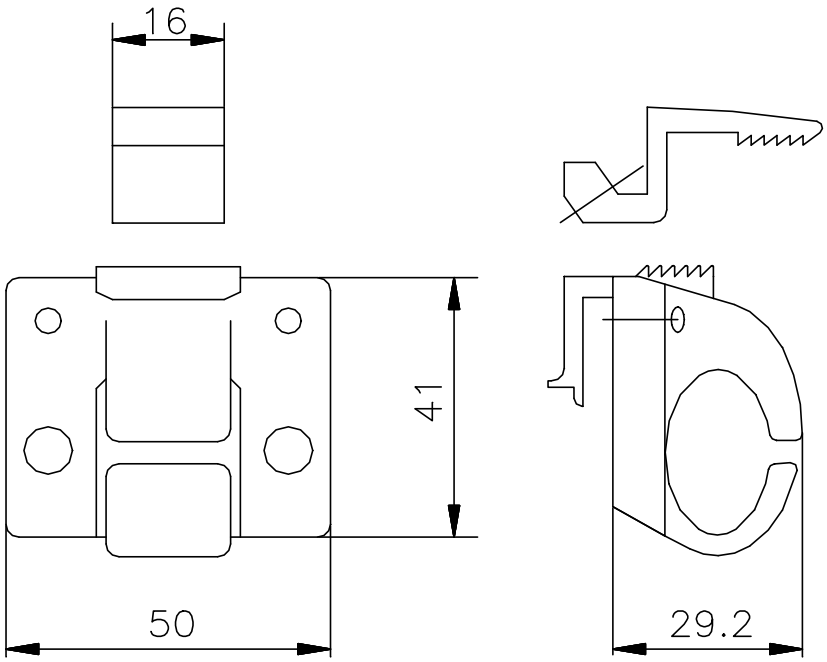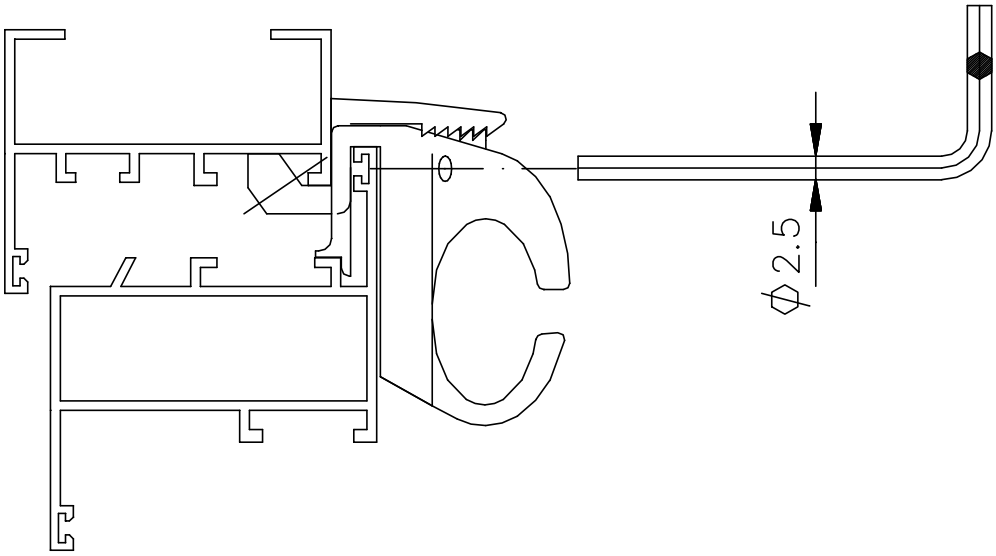1370.1/ 1370.5