1541.4/ 1541.6

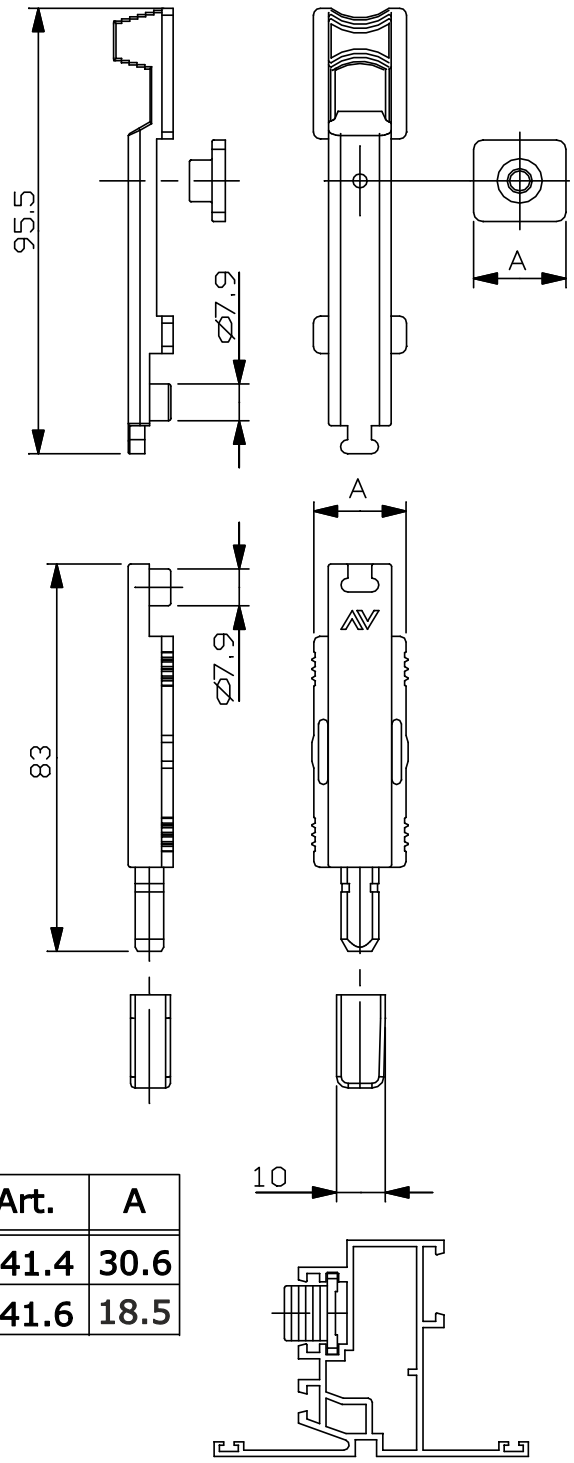

Art.	A
1541.4	30.6
1541.6	18.5