1556.1

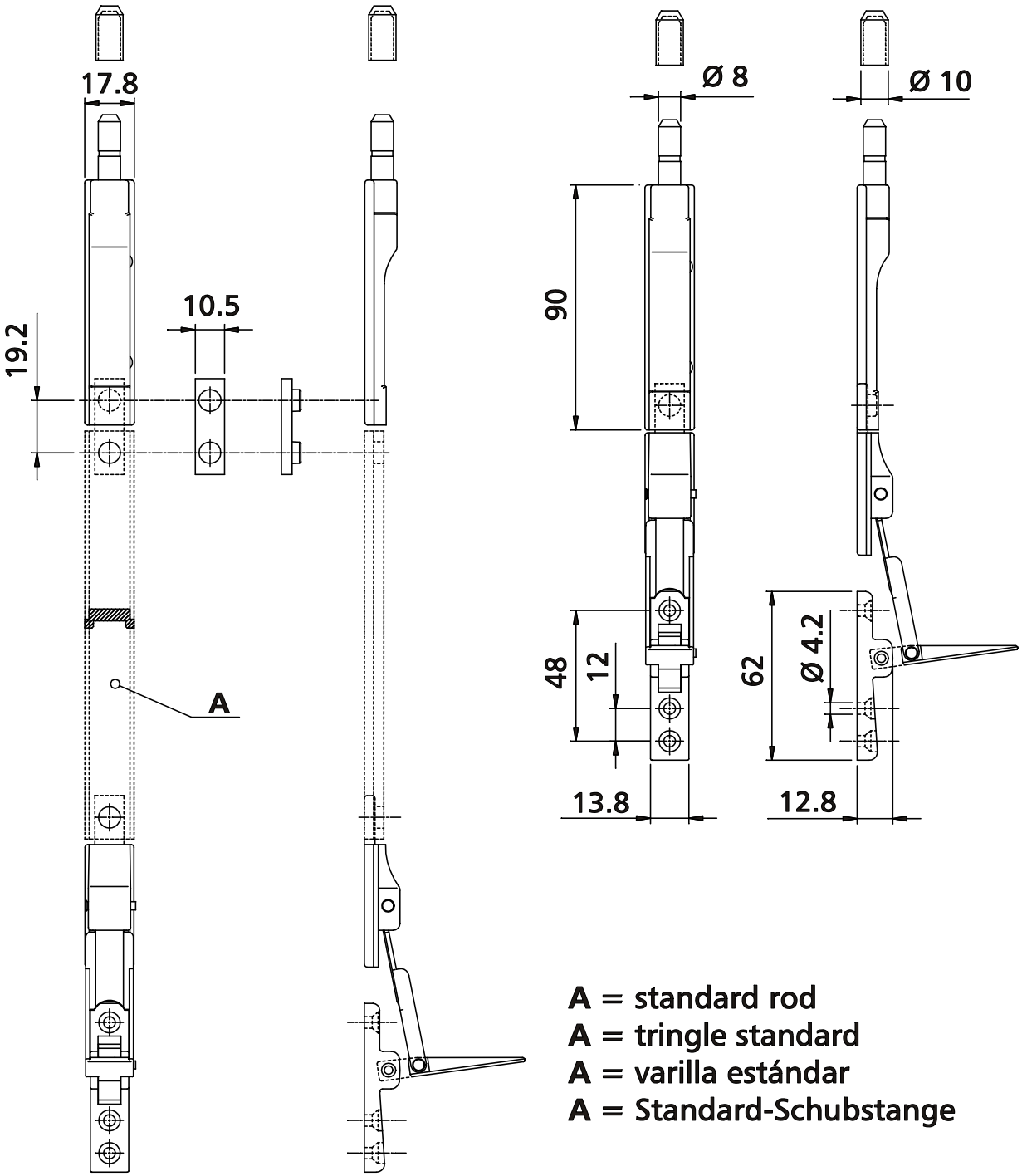

A = standard rod
A = tringle standard
A = varilla estándar
A = Standard-Schubstange