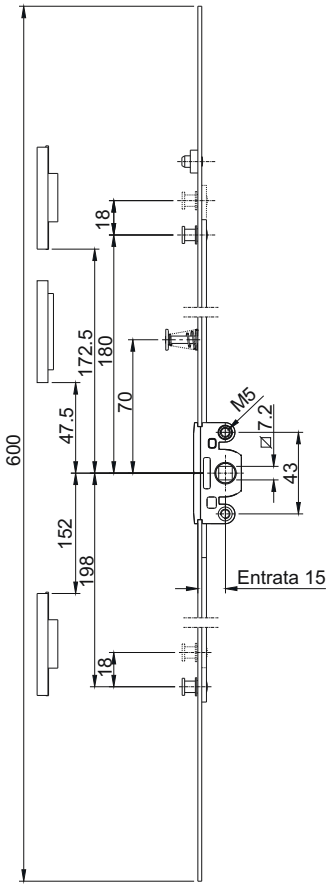2154.15/60X