2154.811/60

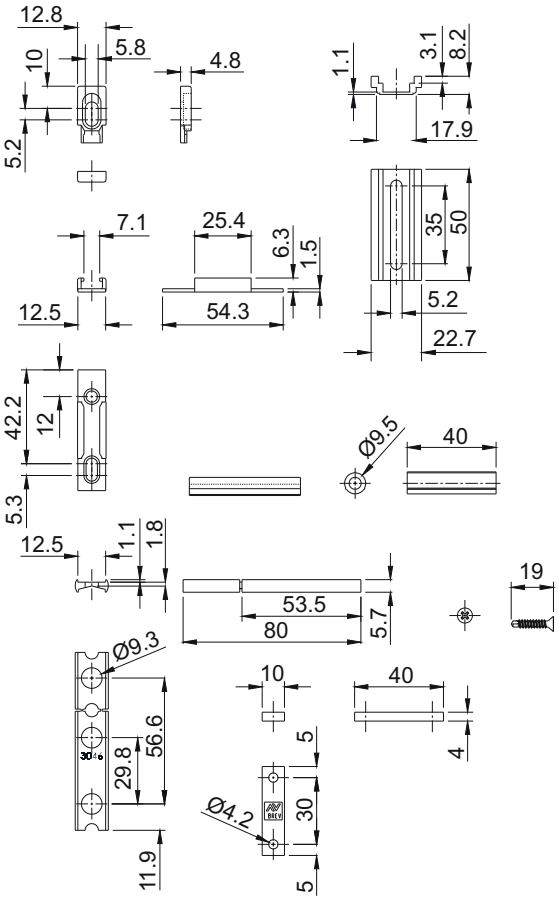
12.8
5.8
10
5.2
4.8
1.1
3.1
8.2
17.9
7.1
12.5
25.4
54.3
6.3
1.5
35
50
5.2
22.7
42.2
12
5.3
Ø9.5
40
12.5
1.1
1.8
53.5
80
5.7
19
Ø9.3
56.6
29.8
11.9
10
40
4
5
30
Ø4.2
5