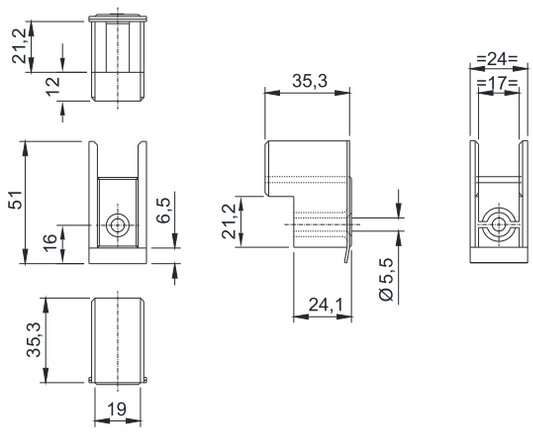2453.820