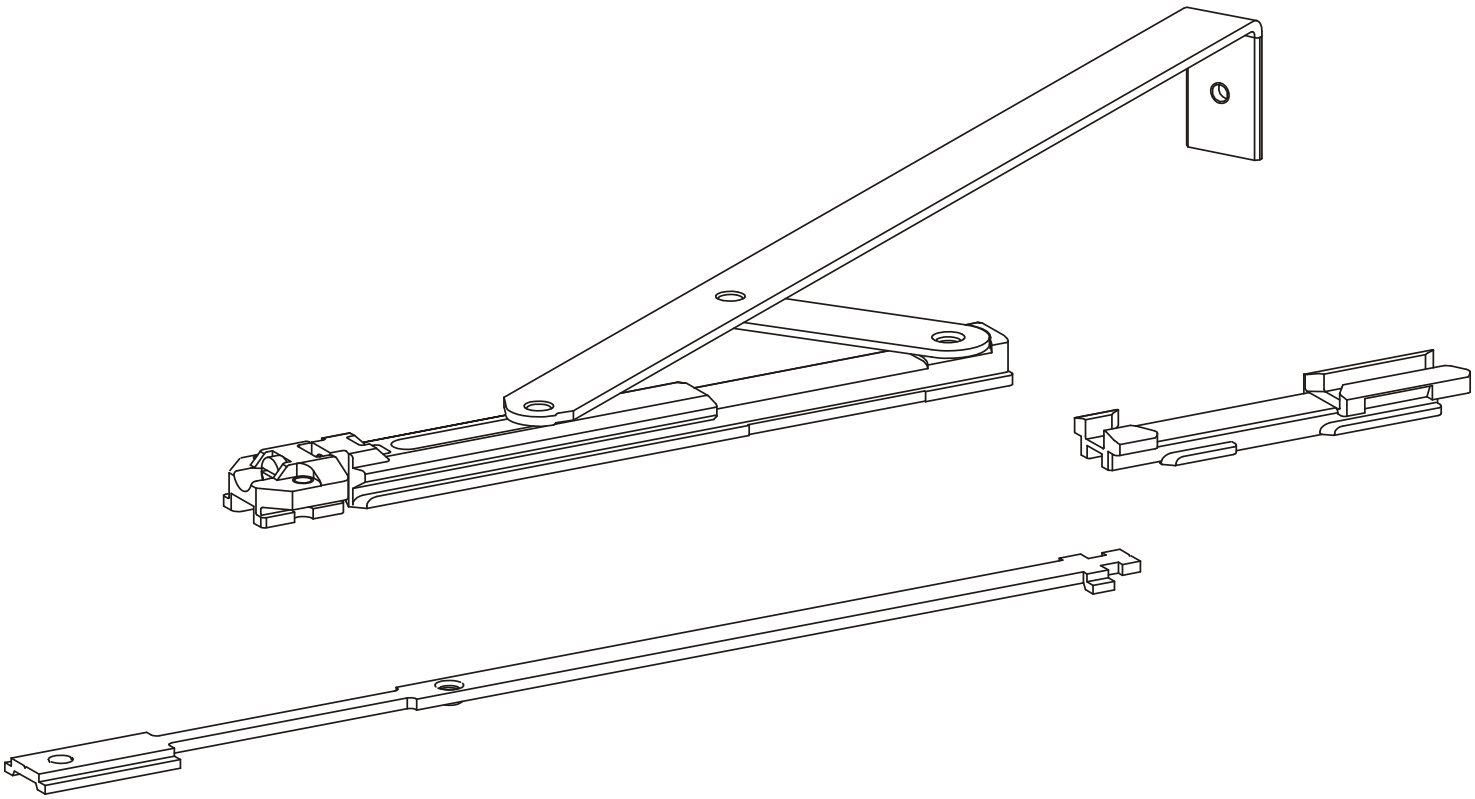3000.751/ 3000.771/ 3001.751/ 3001.771