868.1

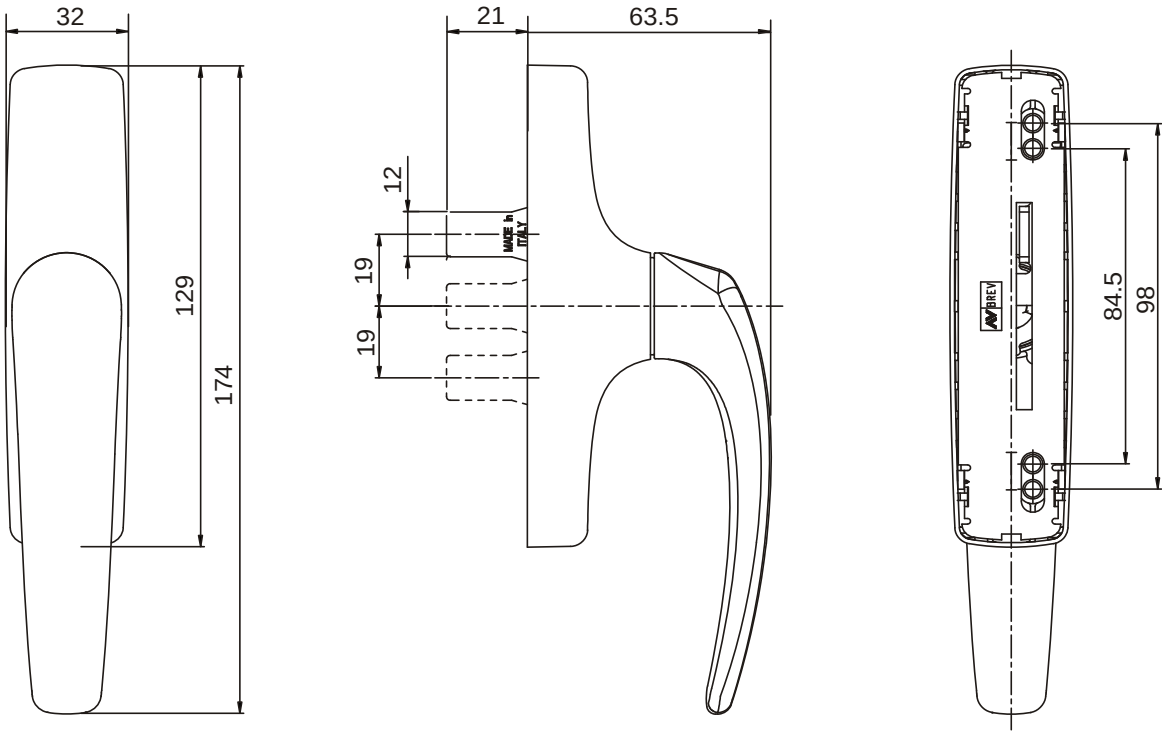
32
129
174
21
63.5
12
19
19
MADE in ITALY
84.5
98

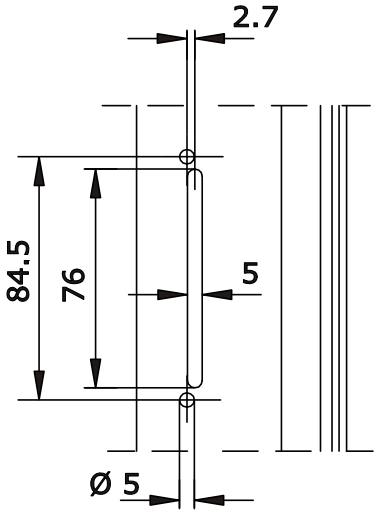
2.7
84.5
76
5
Ø 5

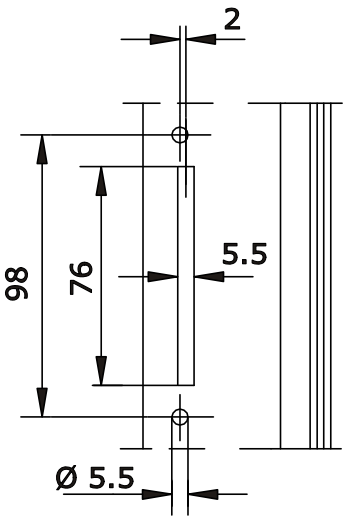
2
98
76
5.5
Ø 5.5