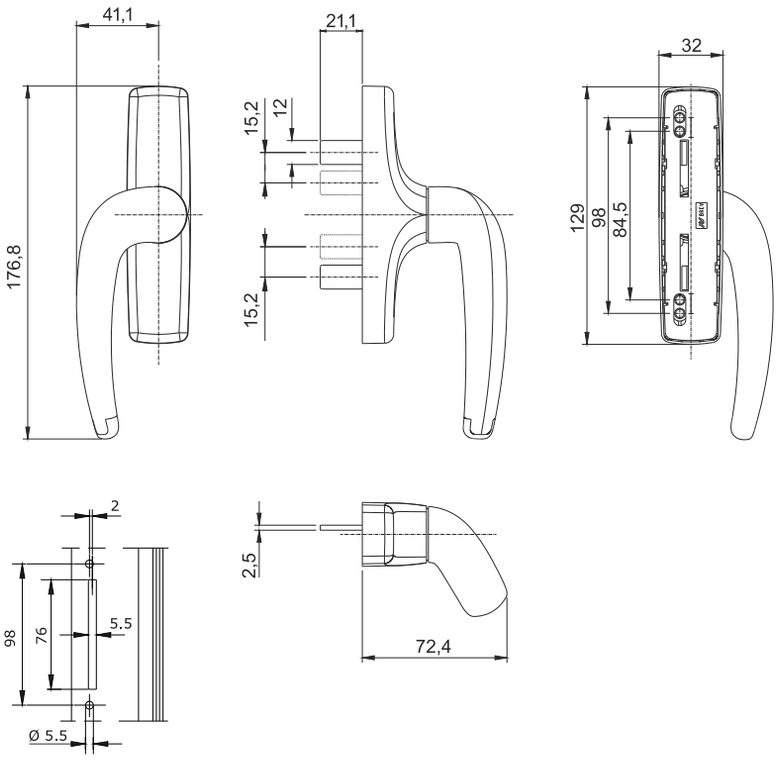875.82R